MODEL CM FORCED DRAFT BURNERS | GAS AND OIL | 1,260,000 – 92,400,000 BTU/HR

Power Flame® Type CMAX

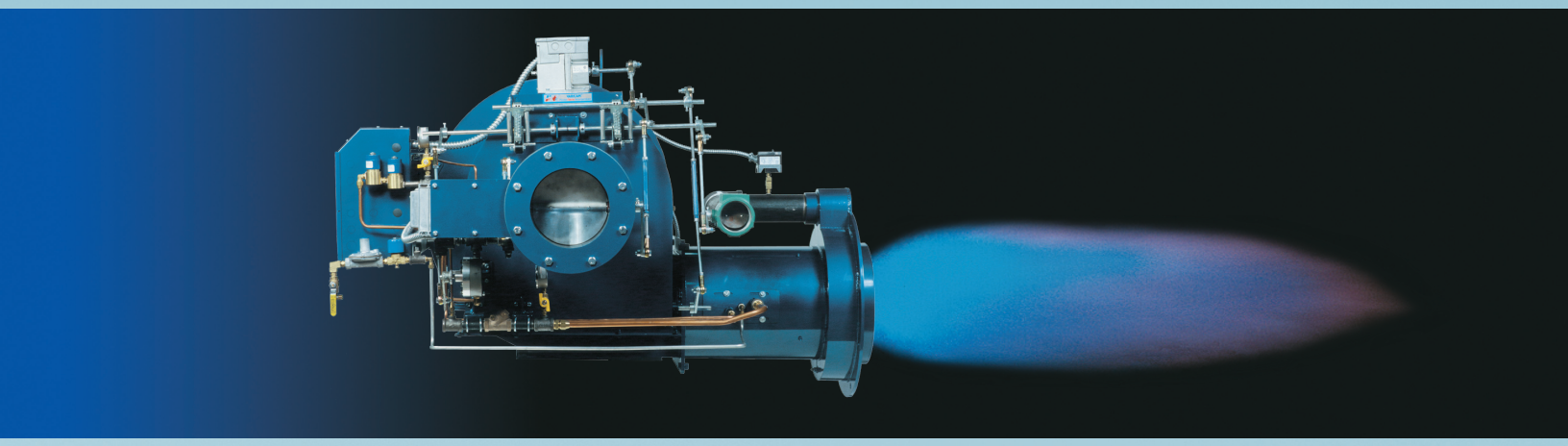

Power Flame's Versatile High Capacity Gas / Oil Burner

The Power Flame CMAX burner offers state-of-the-art technology for maximum combustion efficiency and operating performance when firing all types of oil and gaseous fuels.

Designed specifically for today's firetube boilers, the CMAX burner utilizes a unique firing head design which provides stable combustion over a wide turndown range (10:1 on gas and 8:1 on air atomized oil.)

The low NOx option using induced flue gas recirculation provides minimal emissions on gaseous and liquid fuels.

The "easy access" door on the burner blast tube allows convenient maintenance of the firing head components without disturbing either the fuel piping or electrical connections.

The bottom or top-entry, gas manifold connection facilitates left or right hand configurations.

Our modular design concept produces added flexibility for a wide range of optional features. All packaged combustion systems are factory fire-tested to ensure cost effective installation and start-up.

Characterized Fuel Metering
Varicam® provides adjustable and accurately repeatable fuel air ratios throughout the firing range (optional on CM9 – CM10)

Low Pressure Firing Head
Added flexibility for low gas pressure applications and reduced blower motor horsepower

Circular Furnace Opening
No special cutting of combustion chamber front plate

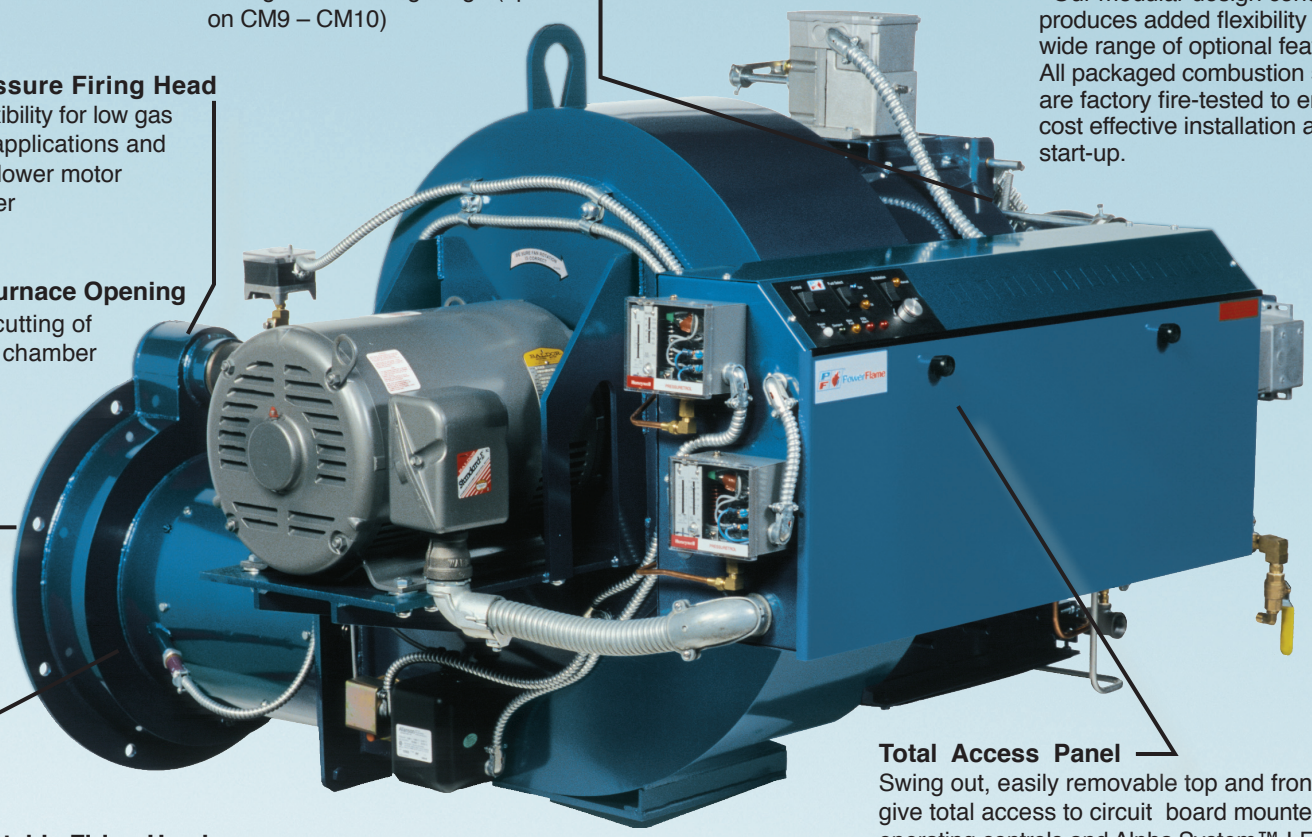

Adjustable Firing Head
Produces optimum fuel-air mixture within the primary combustion zone

Total Access Panel
Swing out, easily removable top and front panels give total access to circuit board mounted operating controls and Alpha System™ LED Indicators & Switches

Power Flame

The Power to Manage Energy

Unique firing head produces stable combustion over wide turndown.

STANDARD EQUIPMENT

- 3450 RPM Motor, backward inclined blower wheel, control panel with Alpha System™ LED Indicators (Power, Demand, Main Fuel, FSG Alarm & Customer Selectable), control switches and manual potentiometer.
- Gas electric pilot and ignition transformer
- Combustion air flow safety switch
- Flame safeguard with prepurge and interrupted pilot

GAS BURNER

- Pressure regulators, pilot and main gas cocks
- Adjustable gas firing head
- UV scanner

AIR ATOMIZED OIL BURNER

- Nozzle assembly with oil and atomizing air trains
- Air compressor
- Remote pump assembly
- UV scanner

ADDED FEATURES

X – Standard **O** – Optional

	CM9	CM9A	CM9B	CM10	CM10A	CM10B	CM10C	CM11	CM11A	CM12	CM12A	CM13	CM14
Modulation with automatic air control	X	X	X	X	X	X	X	X	X	X	X	X	X
Dual gas and oil safety valves	X	X	X	X	X	X	X	X	X	X	X	X	X
High and low gas pressure switches	X	X	X	X	X	X	X	X	X	X	X	X	X
Manual / Auto switch & manual potentiometer	X	X	X	X	X	X	X	X	X	X	X	X	X
Director™ graphic annunciator	O	O	O	O	O	O	O	O	O	O	O	O	O
Varicam™ characterized fuel metering	O	O	O	O	X	X	X	N/A	N/A	N/A	N/A	N/A	N/A
Characterized gas fuel metering	O	O	O	O	O	O	O	X	X	X	X	X	X
IFGR for low NOx operation	O	O	O	O	O	O	O	O	O	O	O	O	O

NOTE: CM11 through CM14 are not UL Listed – assembled with UL Recognized Components

MODEL CM (Forced Draft Burner)

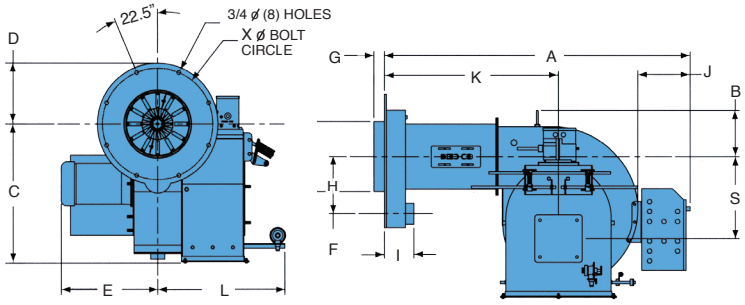

MODEL CMR (For low centerline applications)

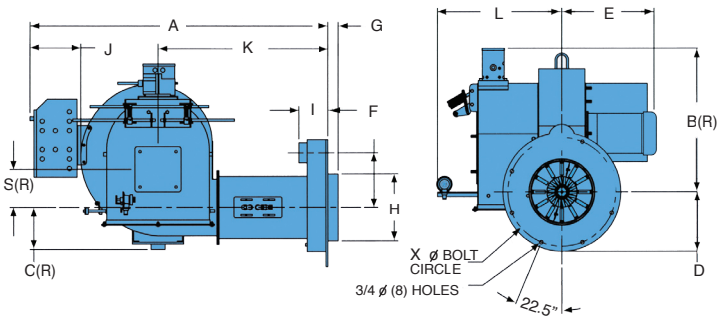

DIMENSIONS (Inches) Standard Models

RATINGS & SPECIFICATIONS

Burner Model	A	B	B(R)	C	C(R)	D	E	F	**** G	H	I	J	K	L	S	S(R)	X	CAPACITY* # 2 OIL GPH MAX.	NAT. GAS MBH MAX.	NOMINAL BOILER H.P. MAX.	BLOWER MOTOR H.P.	GAS** PRESS. REQ'D (IN. W.C.)
CM9–G(O)–30	58	8¾	28½	26 15/16	8 5/16	11¾	18 13/16	10 13/16	2	13¼	5⅝	9⅞	33 3/32	24 13/16	15 17/32	7 19/32	21½	90.0	12,600	300	3.0	21.0
CM9A–G(O)–30	58	8¾	28½	26 15/16	8 5/16	11¾	18 13/16	10 13/16	2	13¼	5⅝	9⅞	33 3/32	24 13/16	15 17/32	7 19/32	21½	122.0	17,040	406	5.0	44.0
CM9B–G(O)–30	58	8¾	28½	26 15/16	8 5/16	11¾	18 13/16	10 13/16	2	13¼	5⅝	9⅞	33 3/32	24 13/16	15 17/32	7 19/32	21½	152.0	21,300	507	7.5	64.0
CM10–G(O)–30	63	11 5/16	32⅛	28⅜	7 25/32	11¾	21⅝	10 13/16	2	13¼	5⅝	10 3/16	35⅝	33	10 1/16	13 3/32	21½	158.0	22,165	528	10.0	73.0
CM10A–G(O)–30	63	11 5/16	32⅛	28⅜	7 25/32	11¾	21⅝	10 13/16	2	13¼	5⅝	10 3/16	35⅝	33	10 1/16	13 3/32	21½	180.0	25,200	600	15.0	93.0
CM10B–G(O)–30	63	11 5/16	32⅛	28⅜	7 25/32	11¾	21⅝	11 13/16	2	15⅛	5⅝	10 3/16	35⅝	33	10 1/16	13 3/32	21½	218.0	30,500	726	15.0	120.0
CM10C–G(O)–30	63	11 5/16	32⅛	28⅜	7 25/32	11¾	21⅝	11 13/16	2	15⅛	5⅝	10 3/16	35⅝	33	10 1/16	13 3/32	21½	257.0	36,000	857	20.0	128.0
CM11–G(O)–30	68	12¾	37 9/16	34 11/16	9 3/16	12 11/16	25 13/16	13 7/32	2	17⅛	5 11/16	9¾	37⅞	33¼	15 13/32	15 13/32	23⅜	329.0	46,000	1095	25.0	77.0
CM11A–G(O)–30	68	12¾	37 9/16	34 11/16	9 3/16	12 11/16	27¼	13 7/32	2	17⅛	5 11/16	9¾	37⅞	33¼	15 17/32	15 13/32	23⅜	378.0	53,000	1260	30.0	101.0
CM12–G(O)–40	84	14¼	44⅞	42 5/16	13 3/16	13 11/16	26⅞	14 7/32	2	19⅛	5¾	9¾	48 15/16	38	18¾	18¾	25⅜	429.0	60,000	1430	60.0	140.0
CM12A–G(O)–40	84	14¼	44⅞	42 5/16	13 3/16	13 11/16	26⅞	14 7/32	2	19⅛	5¾	9¾	48 15/16	38	18¾	18¾	25⅜	456.0	63,850	1520	75.0	140.0
CM13–G(O)–40	100	16	***	46¼	***	14 11/16	22¾	15¼	2	21¼	5¾	14	57¼	44⅝	21⅞	***	27⅜	540.0	75,600	1800	100.0	280.0
CM14–G(O)–40	100	16	***	46¼	***	15 11/16	36 3/16	16¼	2	23¼	5¾	14	57¼	44⅝	21⅞	***	29⅜	660.0	92,400	2200	125.0	280.0

Note 1: Dimensions can vary with optional equipment and system arrangements. Final piping connections should be determined after installation.

Note: * PFI certified capacities listed are based on +1.00" w.c.(CM9) / +2.50" w.c. (CM10) / +4.00" w.c. (CM11) / +8.00" w.c. (CM12–14) combustion chamber pressure. Refer to capacity curves for derates based upon combustion chamber pressure.

** Gas pressures listed are at the inlet to the main shutoff cock and required to obtain PFI certified rating with the standard UL gas train. Optional gas trains are available for lower pressures.

*** Consult factory

**** Refer to O & M manual for proper insertion and quarl dimensions.

® PowerFlame Incorporated
2001 South 21st Street Phone 620-421-0480
Parsons, KS 67357 Fax 620-421-0948
Web Site: http://www.powerflame.com
E-Mail: csd@powerflame.com

Copyright © Power Flame Incorporated 2009

Printed in U.S.A.